International Journal of Electrical and Electronics Engineering (IJEEE)
ISSN(P): 2278-9944; ISSN(E): 2278-9952
Vol. 5, Issue 5, Aug – Sep 2016, 37-48

International Academy of Science, Engineering and Technology
Connecting Researchers; Nurturing Innovations

PERFORMANCE AND ANALYSIS OF FACTS CONTROLLERS FOR DAMPING OSCILLATIONS IN POWER SYSTEMS

G. MAHESH KUMAR[1], P. V. SATYARAMESH[2], K. S. R. ANJANEYULU[3] & P. SUJATHA[4]

[1]Presently Assistant Divisional Engineer in TSSPDCL, Hyderabad, India

[2]Presently Divisional Engineer in State Load Despatch Center Andhra Pradesh Transmission Corporation, India

[3,4]Professor, Department of EEE J.N.T.U, Ananthapuramu, Andhrapradesh, India

ABSTRACT

This paper presents a new nonlinear control of flexible ac transmission systems (FACTS) controllers for the purpose of reducing interarea oscillations in power systems. FACTS controllers consist of series, shunt, or a combination of series-shunt devices that are organized with the bulk power system through injection buses. supervising the angle of these buses can actually damp low frequency interarea oscillations in the system. The initiated control method is based on locating an equivalent reduced connection with nonlinear system for the network from where the dominant machines are derived based on dynamic interconnection. It is described that if correctly selected, measurements obtained from this subsystem of machines are adequate inputs to the FACTS controllers to control the power system. The effectiveness of the suggested method on damping interarea oscillations is approved on the 68 bus, 16 generator systems of the New England/New York network.

KEYWORDS: Coherent Groups, Dominant Machines, Adjustable Ac Transmission Systems (FACTS), Interarea Oscillation, Nonlinear Control, Phasor Measurement Unit (PMU), Wide-Area Power

INTRODUCTION

AS high voltage power electronics become affordable and have a big area of operation, adjustable ac transmission systems (FACTS) controllers will become more widespread in the transmission system to control active supply across congested corridors and guarantee voltage security. As well as, FACTS controllers can provide promising solutions to many of the stability problems that happens within the bulk power system.

FACTS controllers can be classified into three major groups: shunt devices such as the Static Synchronous Compensator (STATCOM), series devices like the static synchronous series compensator (SSSC) and series shunt devices like the unified power flow controller (UPFC)

Along with steady-state solutions such as power flow and voltage control, an additional benefit of FACTS controllers established in the transmission system is that they can also effectively control active supply oscillations which can damage generators, increase line losses, and multiply wear and tear on network components. Therefore advancing appropriate control strategies is essential before FACTS can be confidently utilized in the power system.

Many authors have examined utilizing FACTS, particularily UPFCs to damp interarea oscillations using a quality of practical approaches [1]–[10]. Interarea oscillations could occur in a system because of eventualities such as unexpected

load changes or faults. In [1]–[5], oscillation damping is formed on a linear control approach to the UPFC and power system, whereas further authors observe nonlinear control systems theory and Lyapunov Energy Functions [6]–[10]. Basically, nonlinear advancement are more effective for large perturbations or when the supply system state get separated significantly from the initial operating point.

UPFC MODEL

The UPFC is the most adaptable FACTS device. It consists of a combination of a shunt and series part connected through the DC capacitor as shown in Figure 1. Models for the STATCOM and SSSC can easily be extracted from the UPFC model by considering the shunt and series converters separately. The series connected inverter introduct a voltage with manageable magnitude and phase angle in series with the transmission line, therefore provides active and reactive supply to the transmission line. The shunt-connected inverter

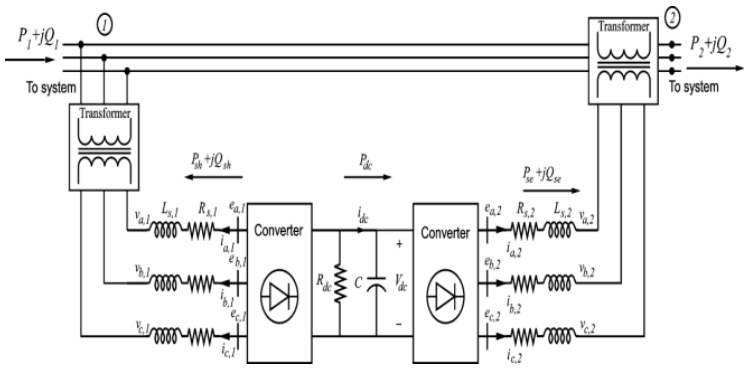

Figure 1: Unified Power Flow Controller Diagram

Provides the active power drawn by the series branch plus the losses and can separately provide reactive compensation to the system. The UPFC model is given by [12] as shown in (1)–(5) at the end of the next page, where the parameters are as shown in Figure 1. The currents $id1$ and $iq1$ are the dq components for the shunt current. The currents $id2$ and $iq2$ are the dq components of the series current. The voltages $V1\angle\theta1$ and $V2\angle\theta2$ are the send and receiving end amp magnitudes and angles, respectively. The UPFC is controlled by varying the phase angles ($\alpha1, \alpha2$)and ($k1, k2$) dimensions of the converter shunt and series output voltages ($e1, e2$), respectively.

The supply balance equations at bus 1 are given by

$$0 = V_1\left(\left(i_{d_1} - i_{d_2}\right)\cos\theta_1 + \left(i_{q_1} - i_{q_2}\right)\sin\theta_1\right) - V_1\sum_{j=1}^{n} V_i Y_{1j}\cos(\theta_1 - \theta_j - \varphi_{1j}) \quad (1)$$

$$0 - V_1\left(\left(i_{d_1} - i_{d_2}\right)\sin\theta_1 - \left(i_{q_1} - i_{q_2}\right)\cos\theta_1\right) - V_1\sum_{j=1}^{n} V_i Y_{1j}\sin(\theta_1 - \theta_j - \varphi_{1j}) \quad (2)$$

and at bus 2

$$0 = V_1\left(\left(i_{d_2}\cos\theta_2 + i_{q_2}\sin\theta_2\right)\right) - V_2\sum_{j=1}^{n} V_i V_{2j}\cos(\theta_2 - \theta_j - \varphi_{2j}) \quad (3)$$

$$0 = V_1 i(i_{d_2} \sin\theta_2 + i_{q_2} \cos\theta_2) - V_2 \sum_{j=1}^{n} V_i Y_{2j} \cos(\theta_2 - \theta_i - \varphi_{2i}) \quad (4)$$

CONTROLLER DESIGN

The controller design has three stages.

A. Stage I

The aim of the first design stage is to find the wanted changes in mechanical powers required to control the system. To acquire the quantity of mechanical power required, it is initially felt that the mechanical powers PMj , are backup into the systems model. Point this is *only* for controller advancement; in the final control, it is not needed that the generator mechanical powers actually vary.

Under this assumption, the system model of (10) and (11) become $\dot{x} = F(x) + GU$ (5)

And $x = [\delta_1 \omega_1 \delta_2 \omega_2 \dots \dots \delta_N \omega_N]$.

Though it is just in need of system frequencies return to steady-state rapidly, a subset of (5) is $\dot{x_2} = f(x_1) + gu$ (6)

Where $x_1 = [\delta_1 \delta_2 \dots . \delta_N]$ and $x_2 = [\omega_1 \omega_2 \dots . \omega_N]$,

where

$$f(x_1) = \begin{bmatrix} -\frac{1}{M_1} E_1 \sum_{k=1}^{n} E_k Y_{1k} \cos(\delta_1 - \delta_k - \varphi_{1k}) \\ \vdots \\ -\frac{1}{M_N} E_N \sum_{k=1}^{n} E_k Y_{Nk} \cos(\delta_N - \delta_k - \varphi_{Nk}) \end{bmatrix}$$

$$g = \begin{bmatrix} \frac{1}{M1} & \cdots & 0 \\ \vdots & \ddots & \vdots \\ 0 & \cdots & \frac{1}{M1} \end{bmatrix}$$

$$u = [Pm1\ Pm2 \dots Pmn \quad]$$

Letting x1s, x2s, and us denote the steady-state values ofx1, x2 and u, respectively, then the mistake in generator rotor frequencies becomes

e = x2-x2s

And

ė = f(x)-f (x1s)-gus+gud.

Equation (21) can be stabilized with input ud so that

$u_d = g^{-1}$ [-f(x_1)+f(x_{1s})-gu_s+Ke]

Where K is a positive definite matrix and

$$e' = -Ke$$

B. Stage Ii

In Stage I, the necessary changes in the generator's mechanical powers were found that controls the system. In Stage II, these changes are coded into control signals to the FACTS controllers. As seen before, the generator mechanical powers do not really change as a result of the proposed control. Therefore, making use of the desired active supply changes, a new control signal is introduced

$$\Delta u = u_{desired} - u_{actual}$$

Where $u_{desired}$ and u_{actual} are the desired and real values given for the generator mechanical supply. This mismatch is translated into the desired changes in the FACTS' bus voltage angles, as given in (25) at the end of the page, where

$$\bar{L} = [l_{1,\ldots\ldots,l_N}]^T$$

$$\bar{\Delta} = [\Delta\delta_1,\ldots\ldots\Delta\delta_n]^T$$

The nonlinear system (25) is derived numerically for $\bar{\Delta}$. Note that if $N \neq n$, then the system of equations is not square and a perfect solution to (25) is not possible. In such case, the equations are derived to find the best fit to $\bar{\Delta}$ which minimizes the error in (25). Those values are then being calculated by the desired current injections i^*_{d1}, i^*_{q1}, i^*_{d2}, i^*_{q2} from the supply balance (6)–(9).

***C. Stage III*;** In Stage III, the desired current injections are translated into real control values for the FACTS controllers. As early, this approach is advanced for the UPFC only, noting that similar approaches can be advanced for the SSSC and STATCOM. To identify the real control inputs, a predictive control based on [14] is used. The simple methodology of predictive control is to develop an asymptotically stable controller such that in an affine nonlinear system, the output $y(t)$ records a said reference value $\omega(t)$ in terms of a given performance:

$$\dot{x} = f(x(t)) + g(x(t))u(t)$$

$$y_i(t) = h_i(x(t)) \quad i=1,\ldots., m$$

Where m is the number of outputs is same as the number of inputs in $u(t)$. The receding horizon performance index is given by

$$J = \frac{1}{2}\int_0^T (\hat{y}(t+\tau) - \hat{\omega}(t+\tau))d\tau \times (\hat{y}(t+\tau) - \hat{\omega}(t+\tau))d\tau$$

Where T is the predictive period. The orginal control input $u(t)$ is given by the initial value of the optimal control input $\hat{u}(t+\tau)$ for $0 \leq \tau \leq$T and $u(t+\tau)$ when $\tau =$0.

The irreplaceable predictive control law is given by

$$u(t) = -(L_g L_f^{\rho-1} h(x))^{-1}(KM_\rho + L_f^\rho h(x) - \omega^{(\rho)}(t)$$

Where ρ is the relative degree for the system outputs (assuming that all outputs have the exact relative degree) and L is the Lie derivative defined by

$L_\mu v = \frac{\partial v}{\partial x}\mu$ The matrix K is given by

$$M_\rho = \begin{bmatrix} h(x) - w(t) \\ L_f^1 h(x) - w^{[1]}(t) \\ \vdots \\ L_f^{\rho-1} h(x) - w^{[\rho-1]}(t) \end{bmatrix}.$$

The matrix K is the first rows of the matrix $\psi_{rr}^{-1}\psi_{\rho r}^{T}$ where

$$\psi_{rr} = \begin{bmatrix} \psi_{(\rho+1,\rho+1)} \cdots & \psi_{(\rho+1,\rho+r+1)} \\ \psi_{(\rho,\rho+1)} \cdots & \psi_{(\rho+r+1,\rho+r+1)} \end{bmatrix}$$

$$\psi_{\rho r} = \begin{bmatrix} \psi_{(1,\rho+1)} \cdots & \psi_{(1,\rho+r+1)} \\ \psi_{(\rho,\rho+1)} \cdots & \psi_{(\rho,\rho+r+1)} \end{bmatrix}$$

Where

$\psi_{i,j} = \frac{T^{i+j-1}}{(i-1)!(j-1)!(i+j-1)!}$, i, j=1…$\rho + r + 1$

And

$\bar{T} = diag\{T, \ldots\ldots, T\} \in R^{m\times m}$

Returning to (1)–(5), the relative degree for all of the outputs is $\rho = 1$ and assuming the control order to be $r = 0$, then the control law for the UPFC becomes

$$u_1 = \frac{-3L_1}{\omega_s v_{dc} T}(i_{d_1} - i_{d1}^*) + \frac{R_1}{V_{dc}} i_{d1} - \frac{L_1}{V_{dc}} i_{q1} + \frac{V_1 \cos\theta_1}{V_{dc}} + \frac{L_1}{\omega_s V_{dc}} \frac{d}{dt} i_{d1}^*$$

$$u_2 = \frac{-3L1}{\omega_s v_{dc} T}(i_{q1} - i_{q1}^*) + \frac{R_1}{V_{dc}} i_{q1} - \frac{L_1}{V_{dc}} i_{d1} + \frac{V_1 \sin\theta_1}{V_{dc}} + \frac{L_1}{\omega_s V_{dc}} \frac{d}{dt} i_{q1}^*$$

$$u_3 = \frac{-3L1}{\omega_s v_{dc} T}(i_{d_2} - i_{d2}^*) + \frac{R_1}{V_{dc}} i_{d2} - \frac{L_1}{V_{dc}} i_{q2} + \frac{V_2 \cos\theta_2}{V_{dc}} - + \frac{V_1 \cos\theta_1}{V_{dc}} \frac{L_2}{\omega_s V_{dc}} \frac{d}{dt} i_{d2}^*$$

$$u_4 = \frac{-3L_2}{\omega_s v_{dc} T}(i_{q2} - i_{q2}^*) + \frac{R_2}{V_{dc}} i_{q2} - \frac{L_2}{V_{dc}} i_{d2} + \frac{V_2 \sin\theta_2}{V_{dc}} - \frac{V_1 \sin\theta_1}{V_{dc}} + \frac{L_1}{\omega_s V_{dc}} \frac{d}{dt} i_{q1}^*$$

These inputs are then translated into the control inputs for the UPFC

$$K_1 = \sqrt{u_1^2 + u_2^2}$$

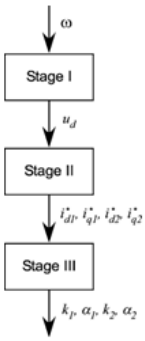

Figure 2: Three Stage Control Process

$$\alpha_1 = \tan^{-1}\frac{u_2}{u_1}$$

$$k_2 = \sqrt{u_3^2 + u_4^2}$$

$$\alpha_2 = \tan^{-1}\frac{u_4}{u_3}$$

SELECTIVE FEEDBACK MEASUREMENTS

Based on Dominant Machines

The control method proposed in the previous section needs generator rotor frequencies to be implemented. Even if with recent advances in wide area frequency measurement (FNET) it may be possible to provide same rate of global measurements, it is still not accomplished to assume that all generator rotor frequencies are equally available. However, it is logical to assume that a *subset* of the measurements is available for feedback and the remainder of the states can be valued based on the available measurements. The most likely machines to obtain measurements from are those machines which overlook Consistent groups there are numerous methods for computing consistent groups in the literature [15]–[18]. In [18], the consistency associated method is based on modal analysis and Gaussian elimination with full pointing on the chosen eigenvectors of the system to find the considered generators and their group members. The opted eigenvectors are chosen depend on the least oscillatory modes of the system. Once the dominant machines are identified, a reduced order system is calculated which captures the “slow” dynamics of the original system. In this process, the remaining unstrained states of the system can estimated based on the states which are measured via singular perturbation [13]. Let the dominant machines be ordered from 1 to Q and the rest of the machines be numbered from Q+1 to N, then the difference in the non-dominant machines can be neared using a zero-th order model by

$$\begin{bmatrix} X_{Q+1,Q+1} & \cdots & X_{Q+1,N} \\ \vdots & \ddots & \vdots \\ X_{N,Q+1} & \cdots & X_{N,N} \end{bmatrix} \begin{bmatrix} \Delta\delta_{Q+1} \\ \vdots \\ \Delta\delta_N \end{bmatrix}$$

$$\begin{bmatrix} \sum_{k=1}^{Q} X_{Q+1,k}\Delta\delta_k - \sum_{k=N+1}^{N+n} X_{Q+1,k}\Delta\delta_k \\ \vdots \\ \sum_{k=1}^{Q} X_{N,k}\Delta\delta_k - \sum_{k=N+1}^{N+n} X_{N,k}\Delta\delta_k \end{bmatrix}$$

Where

$$x_{i,j} = \frac{\mu_{ij}}{\mu_{ii}}$$

And

$$\mu_{ij} = -E_i E_j Y_{ij} \sin(\delta_i - \delta_j - \varphi_{ij}) \quad i \neq j$$

$$\mu_{ii} = -\sum_{k=1}^{N+P} E_i E_j Y_{ij} \sin(\delta_i - \delta_j - \varphi_{ij}) \quad i = j$$

Note than when only the dominant machines are opted for the control action, only the rows corresponding to the dominant machines will be utilized in (25) thereby lowering the order of the system. This is advantageous since the pseudo-inverse required to crack the set of equations is more nearly square providing better convergence.

EXAMPLE AND RESULTS

Although the control has been advanced using the classical generator model, the control approach will be approved using the full 10th order model which includes an exciter/AVR, turbine, and governor dynamics. The model is shown in the Appendix. The proposed control is validated on the 68 bus, 16 generator New England/New York test system. The network data and coherent groupings are the same as in [19]. The transmission tie lines are depicted with bold lines. The reference generators for the five areas are G5, G13, G14, G15, and G1

Table 1: Facts Parameters

	R_1	L_1	R_2	L_2	R_p	C
UPFC	0.01	0.15	0.001	0.015	25	1400
STATCOMs	0.01	0.10	n/a	n/a	25	1200

Figure 3 shows a subset of the generator speeds with no FACTS controllers in the system compared to Case 1). Not all responses are given for the sake of brevity. The opted generators are taken from four of the five consistent areas (generator 15 is by itself in an area and is not given). Note that the generators go unstable as a result of the error, but the proposed control is able to stabilize the system and rapidly mitigate the oscillations.

Figure 4 shows the active power injections of the UPFC. The series injection is depicted in the top figure and the shunt injection is given in the below figure. In this figure, Case 2 (bold) is matched to Case 3 (thin). These series active power injection for the given control is very modest; consequently the rating of the series transformer and converter do not need to be extremely large. The shunt active supply is related to the series active power

$$-P_{shunt} = P_{series} - \frac{V_{dc}^2}{R_{dc}}$$

Therefore P_{shunt} will be opposite in polarity to P_{series} and will have variation in magnitude by the losses in the converter. Furthermore, during transients the dc link capacitor will charge or discharge active supply. Also note that by definition, the shunt active supply absorbed is positive, thus while steady-state the STATCOM will absorb active supply and the figures indicate a positive value. The shunt converter injects active supply into the system during the fault. Similar behavior is displayed by the STATCOMs as shown in Figure 8. Figure 9 depicts the dc link capacitor voltages. The UPFC and one of the STATCOMs experience a drop of approximately 5% while the second STATCOM experiences a minimum increase in voltage. This is valid, since to damp oscillations, it may be compulsory to inject active supply in some areas and absorb active power in other areas.

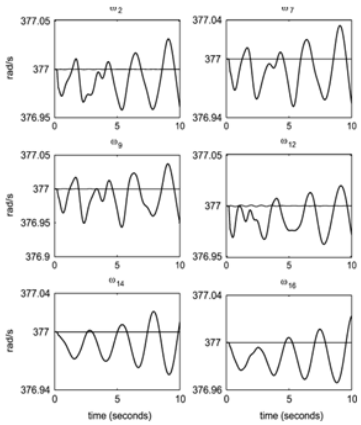

Figure 3: Generator Speeds for no FACTS Controllers (Bold) and Case 1 (Thin)

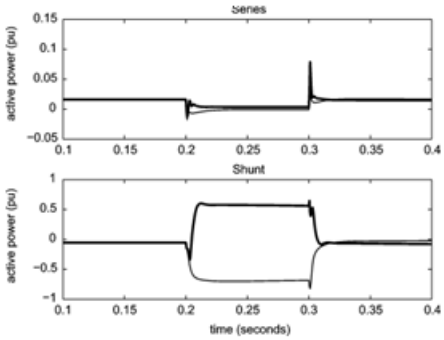

Figure 4: UPFC Injected Active Power

CONCLUSIONS

A three stage nonlinear control scheme has been proposed for damping interarea oscillations by multiple FACTS controllers. Any FACTS device that can control its interface bu angle(s) with the supply network can utilize this control approach. The method uses the generators' frequencies as the result data for the control. Using measurements from the dominant generators and estimating the rest of the states based on correspondence reduced systems are shown to considerably reduce the number of needed global measurements for better control. Based on the intimation results, the suggested method shows confirming results for wide-area control of power systems there are many issues which need to be given try however. There is a Considerable computational burden for the controller which needs fast processors for actual performance However, good invasive groupings will lower the computation time by developing the calculated process. Future work will also consider the Effect of time delays and communication noise in the measured terms on the control effectiveness Sensitivity of the proposed method to system not reliable and topology changes will also be studied.

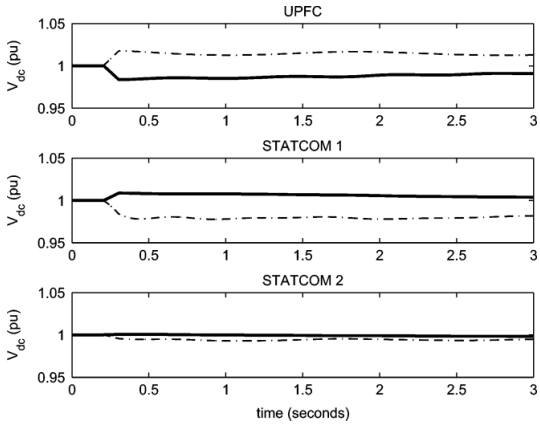

Figure 5: FACTS VDC: Case 2 (bold) and Case 3 (dashed).

REFERENCES

1. H. Wang, "A unified model for the analysis of FACTS devices in damping power system oscillations—Part III: Unified power flow controller," *IEEE Trans. Power Del.*, vol. 15, no. 3, pp. 978–983, Jul. 2000.
2. B. C. Pal, "Robust damping of interarea oscillations with unified power flowcontroller," *Proc. Inst. Elect. Eng., Gen. Transm. Distrib.*, vol. 149, no. 6, pp. 733–738, Nov. 2002.
3. B. Chaudhuri, B. C. Pal, A. Zolotas, I. Jaimoukha, and T. Green, "Mixed-sensitivity approach to □□ control of power system oscillations employing multiple FACTS devices," *IEEE Trans. Power Syst.*, vol. 18, no. 3, pp. 1149–1156, Aug. 2004.
4. M. M. Farsangi, Y. H. Song, and K. Y. Lee, "Choice of FACTS device control inputs for damping interarea oscillations," *IEEE Trans. Power Syst.*, vol. 19, no. 2, pp. 1135–1143, May 2004.
5. N. Tambey and M. L. Kothari, "Damping of power system oscillations with unified power flow controller (UPFC)," *Proc. Inst. Elect. Eng., Gen., Transm. Distrib.*, vol. 150, pp. 129–140, Mar. 2003.
6. M. Ghandhari, G. Andersson, and I. A. Hiskens, "Control Lyapunov functions for controllable series devices," *IEEE Trans. Power Syst.*, vol. 16, no. 4, pp. 689–694, Nov. 2001.
7. S. Robak, M. Januszewski, and D. D. Rasolomampionona, "Power system stability enhancement using PSS and Lyapunov-based controllers: A comparative study," in *Proc. IEEE Power Tech Conf.*, Bologna, Italy, 2003, vol. 3, p. 6.
8. C.-C. Chu and H.-C. Tsai, "Application of Lyapunov-based adaptive neural network UPFC damping controllers for transient stability enhancement," presented at the IEEE Power Energy Soc. General Meet., Pittsburgh, PA, Jul. 20–24, 2008.
9. A. Bidadfar, M. Abedi, M. Karari, and C.-C. Chu, "Power swings damping improvement by control of UPFC and SMES based on direct Lyapunov method application," presented at the IEEE Power and Energy Soc. General Meet., Pittsburgh, PA, Jul. 20–24, 2008.

10. M. Januszewski, J. Machowski, and J. W. Bialek, “Application of th direct Lyapunov method to improve damping of power swings by control of UPFC,” *Proc. Inst. Elect. Eng., Gen., Transm. Distrib.*, vol. 151, pp. 252–260, Mar. 2004.

11. Z. Zhong, C. Xu, B. J. Billian, L. Zhang, S. J. Tsai, R. W. Conners, V. A. Centeno, A. G. Phadke, and Y. Liu, “Power system frequency monitoring network (FNET) implementation,” *IEEE Trans. Power Syst.*, vol. 20, no. 4, pp. 1914–1921, Nov. 2005.

12. L. Dong, M. L. Crow, Z. Yang, and S. Atcitty, “A reconfigurable FACTS system for university laboratories,” *IEEE Trans. Power Syst.*, vol. 19, no. 1, pp. 120–128, Feb. 2004.

13. P. Sauer and M. A. Pai, *Power System Dynamics and Stability*. Upper Saddle River, NJ: Prentice-Hall, 1998.

14. W.-H. Chen, D. J. Balance, and P. J. Gawthrop, “Optimal control of nonlinear systems:Apredictive control approach,” *Automatica*, vol. 39, pp. 633–641, 2003.

15. J. H. Chow, R. Galarza, P. Accari, and W. W. Price, “Inertial and slow coherency aggregation algorithms for power system dynamic model reduction,” *IEEE Trans. Power Syst.*, vol. 10, no. 2, pp. 680–685, May 1995.

16. S. Geeves, “A modal-coherency technique for deriving dynamic equivalents,” *IEEE Trans Power Syst.*, vol. 3, no. 1, pp. 44–51, Feb. 1998.

17. M. L. Ourari, L.-A. Dessaint, and V.-Q. Do, “Dynamic equivalent modeling of large power systems using structure preservation technique,”*IEEE Trans. Power Syst.*, vol. 21, no. 3, pp. 1284–1295, Aug. 2006.

18. J. H. Chow, Ed., *Time-Scale Modeling of Dynamic Networks With Applications to Power Systems*. Berlin, Germany: Springer-Verlag, 1982.

19. G. Rogers, *Power System Oscillations*. Norwell, MA: Kluwer, 2000.

20. E. V. Larsen, J. J. Sanchez-Gasca, and J. H. Chow, “Concepts for design of FACTS controllers to damp power swings,” *IEEE Trans. Power Syst.*, vol. 10, no. 2, pp. 948–956, May 1995.

21. P. Pourbeik and M. J. Gibbard, “Simultaneous coordination of power system stabilizers and FACTS device stabilizers in a multimachine power system for enhancing dynamic performance,” *IEEE Trans. Power Syst.*, vol. 13, no. 2, pp. 473–479, May 1998.

22. N. Martins and L. T. G. Lima, “Determination of suitable locations for power system stabilizers and static VAR compensators for damping electromechanical oscillations in large scale power systes,” *IEEE Trans. Power Syst.*, vol. 5, no. 4, pp. 1455–1469, Nov. 1990.

23. B. K. Kumar, S. Singh, and S. Srivastava, “Placement of FACTS controllers using modal controllability indices to damp out power system oscillations,” *Proc. Inst. Eng. Technol., Gen., Transm., Distrib.*, vol. 1, no. 2, pp. 252–260, Mar. 2007.

24. C. Schauder and H. Mehta, “Vector analysis and control of advanced static VAR compensators,” *Proc. Inst. Elect. Eng., C*, vol. 140, no. 4, 1993.

25. M. Zarghami and M. L. Crow, "Discussion of effective control of interarea oscillations by UPFCs," presented at the 39th North American Power Symp., Las Cruces, NM, Oct. 2007.

AUTHOR'S DETAILS

Mr. G. Mahesh Kumar, obtained his B.tech and M.tech from Jawaharlal Nehru Technology University, Hyderabad in 1992 and 1999 Now he is continuing his Ph.d (Electrical and Electronics Branch) in Jawaharlal Nehru Technology University, Anantapuramu. He is presently working has Assistant Divisional Engineer in TSSPDCL, Hyderabad

Mr. P.V.Satyaramesh obtained his B.tech from Jawaharlal Nehru Technology University, Kakinada and Mtech from National Institute of Technology, Warangal Ph.D Electrical Engineering from Jawaharlal Nehru Technology University, Hyderabad in 1986 and 1988 and 2010 respectively. He is presently Divisional Engineer in State Load Despatch Center Andhra Pradesh Transmission Corporation, India

Dr. P. Sujatha, Working as a Professor in Dept of Electrical and Electronics Engineering J.N.T.U Ananthapuramu, Andhra Pradesh, India. She completed her B.Tech Degree in 1993 and M.Tech Degree with specialization in Electrical Power System in 2003 & Ph.D in 2012 from JNTUA. She has 17 years of teaching experience and her areas of interest include Reliability Engineering with emphasis to power systems and real time energy Management

Dr. K.S.R Anjaneyulu, Professor in Dept of Electrical and Electronics Engineering J.N.T.U Ananthapuramu, Andhra Pradesh, India. He has completed his B.Tech Degree in February 1982, MTech Degree in February 1985 and Ph.D in July 1999. He has 30 years of teaching research experience and his areas of interest include power system control system FACTS devices, Neuro-Fuzzy and Genetic application